ACB 243153-CK Double Inlet Blower

243mmx153mm
(Ø 9.56"x6.02")

MOTOR	Outer roter moter Ø92mm
HOUSIND	Aluminum
IMPELLER	Plastic
BEARING	Ball
INSULATION	Class F
INSULATION RESISTANCE	0 °C to 65 °C
OPERATING TEMPERATURE	10M Ohms Min. @500VDC
DIELECTRIC STRENGTH	5mA Max.at 500 VAC for 1 minute
SAFETY	Thermally Protected
WEIGHT	6.5kg
ROHS COMPLIANCE	YES

243 mm

DIMENSION

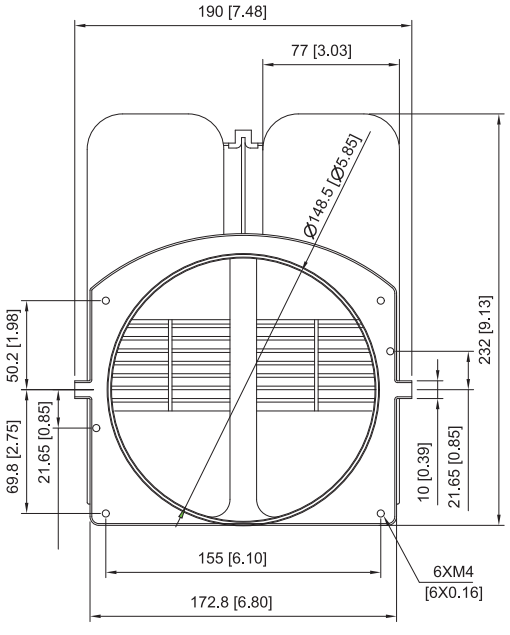

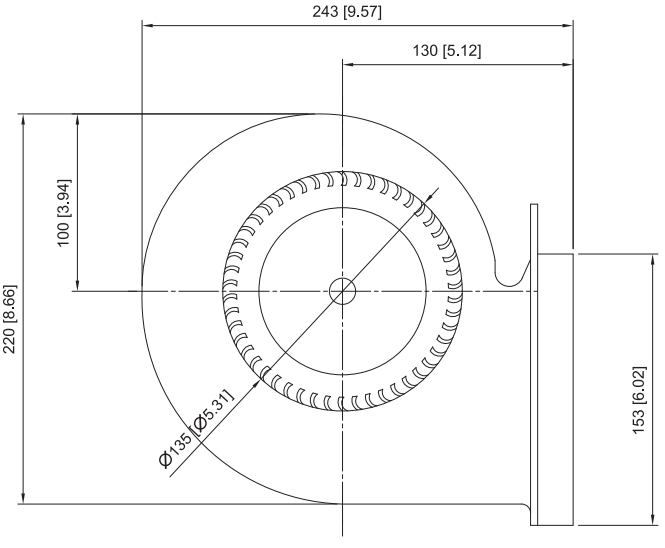

UNIT:mm[inch]

SPECIFICATION

MODEL NO.	RATED VOLTAGE(V)	FREQUENCY (Hz)	RATED CURRENT (A)	INPUT POWER(W)	SPEED (RPM)	MAX. AIR PRESSURE inchH₂O	MAX. AIR PRESSURE mmH₂O	MAX. AIR FLOW CFM	MAX. AIR FLOW m³/min	NOISE dB(A)@1M
ACB243153V1HB-CK	115	60	3.26	380	3200	2.32	59	576	16.3	50
ACB243153V2HB-CK	220	50	1.20	260	2300	1.65	42	551	15.6	50
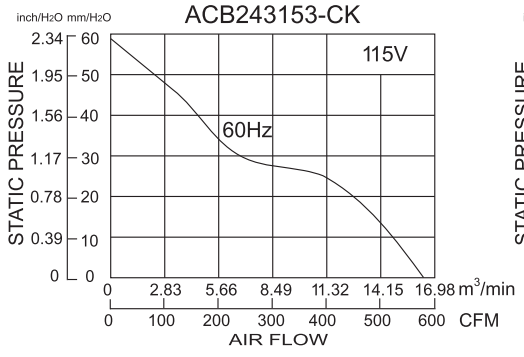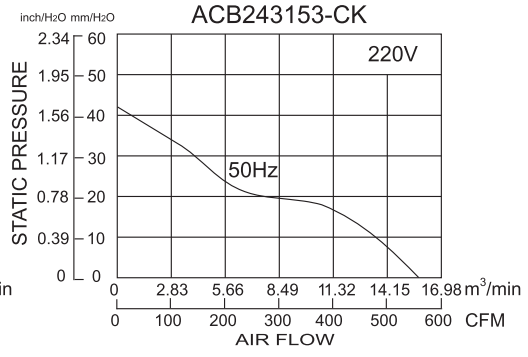
AIR PERFORMANCE